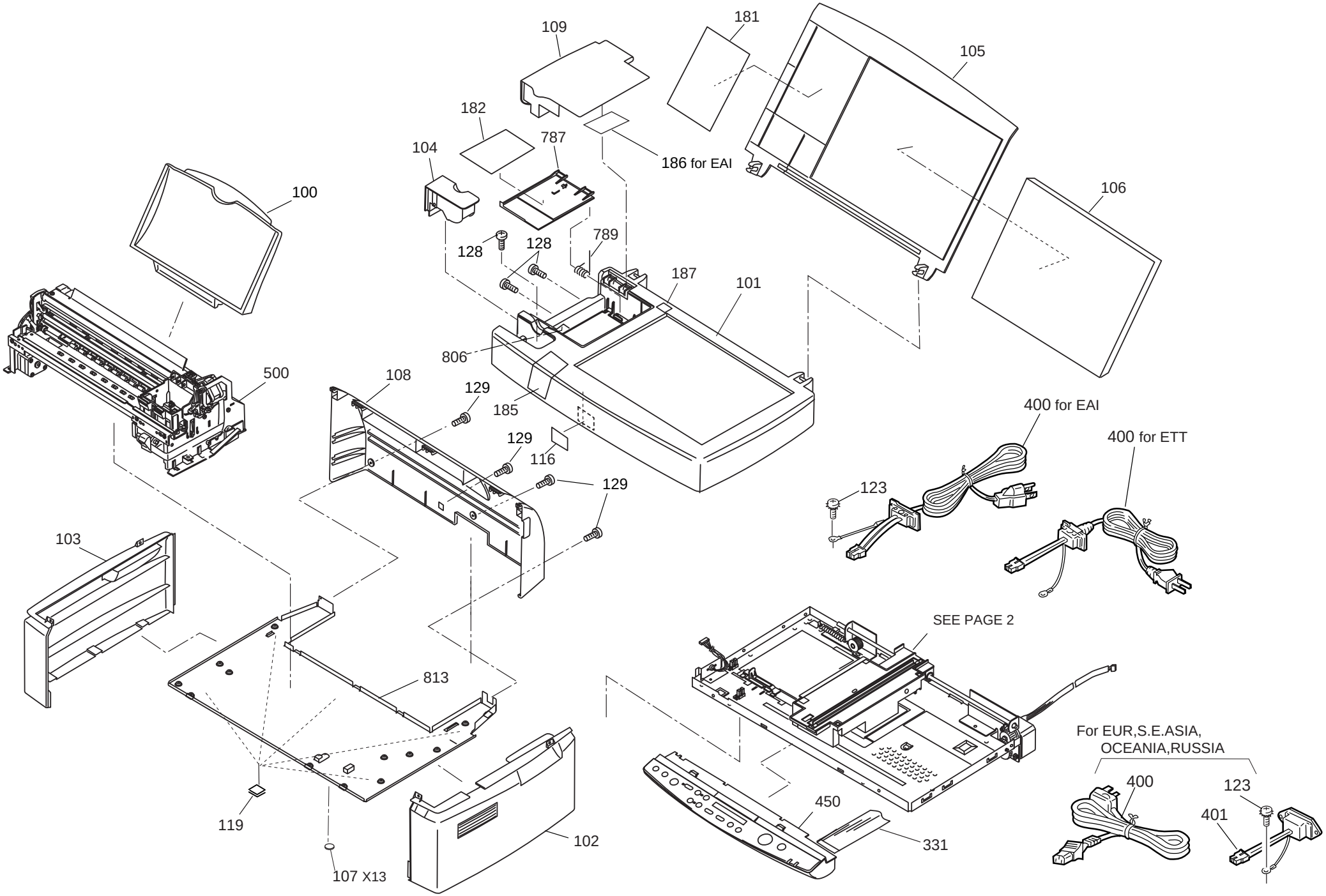

EPSON STYLUS SCAN 2500 No.1 Rev.01 10138

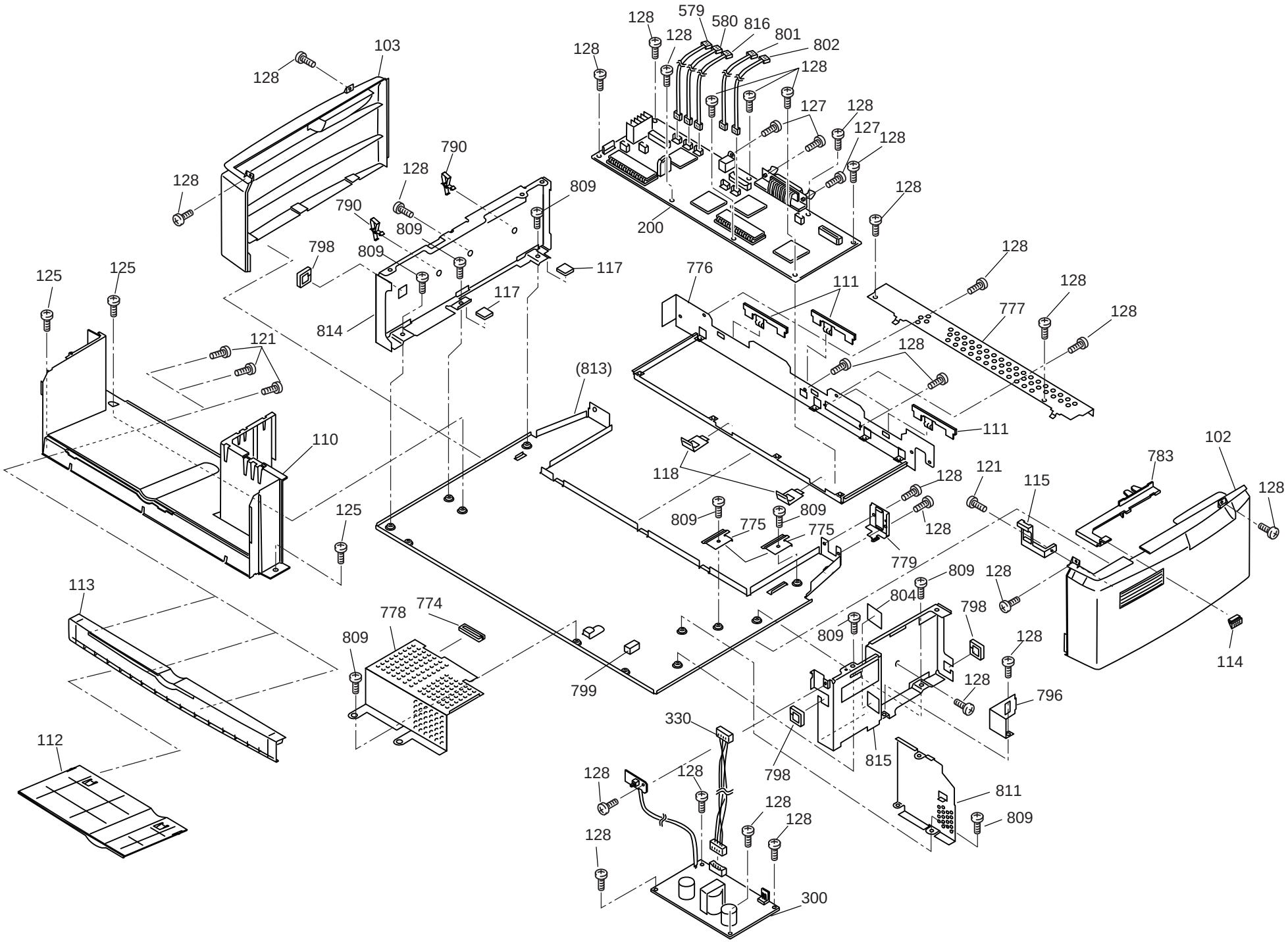

EPSON STYLUS SCAN 2500 No.2 Rev.01 10138

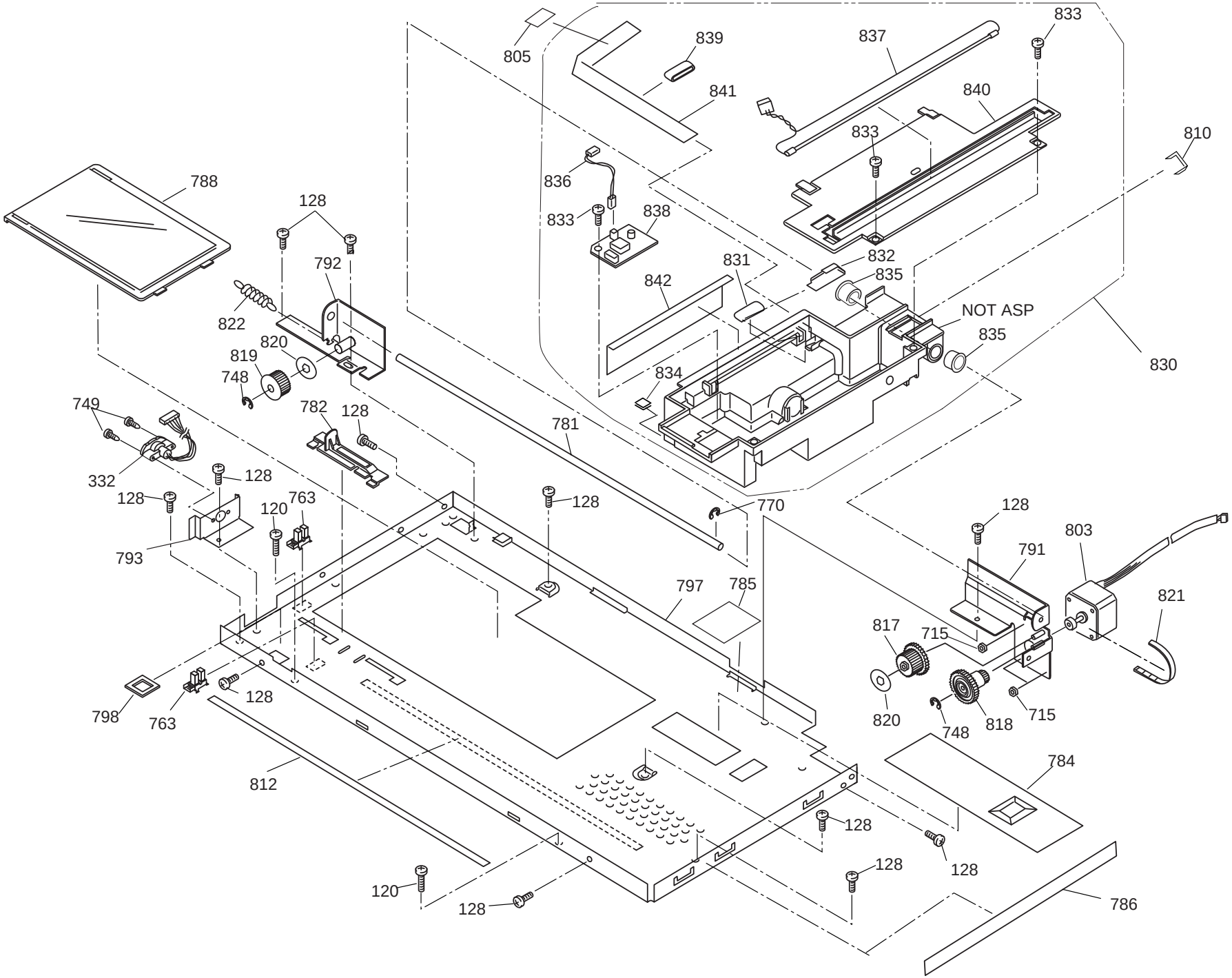

EPSON STYLUS SCAN 2500 No.3 Rev.01 10138

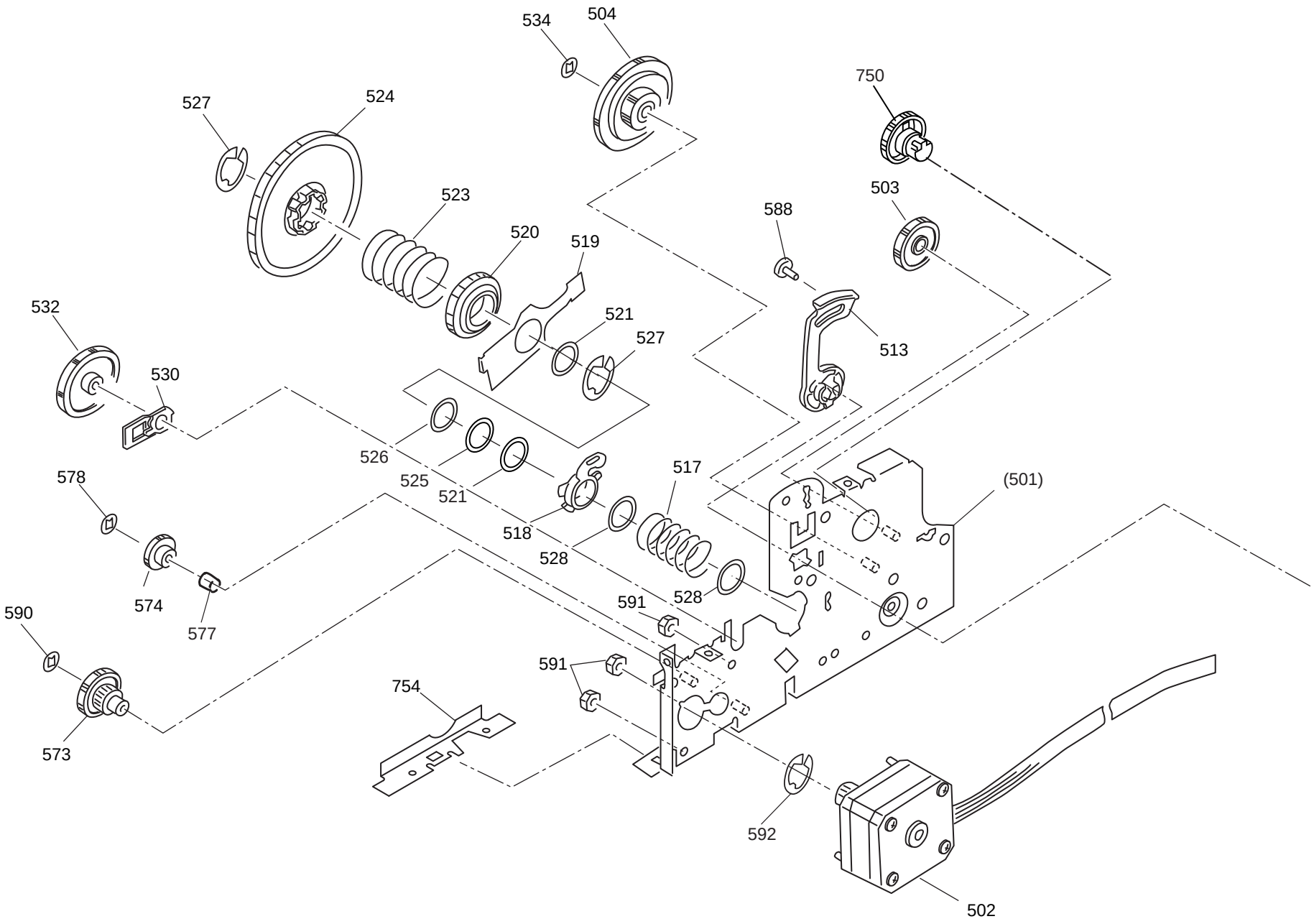

EPSON STYLUS SCAN 2500 No.4 Rev.01 10138

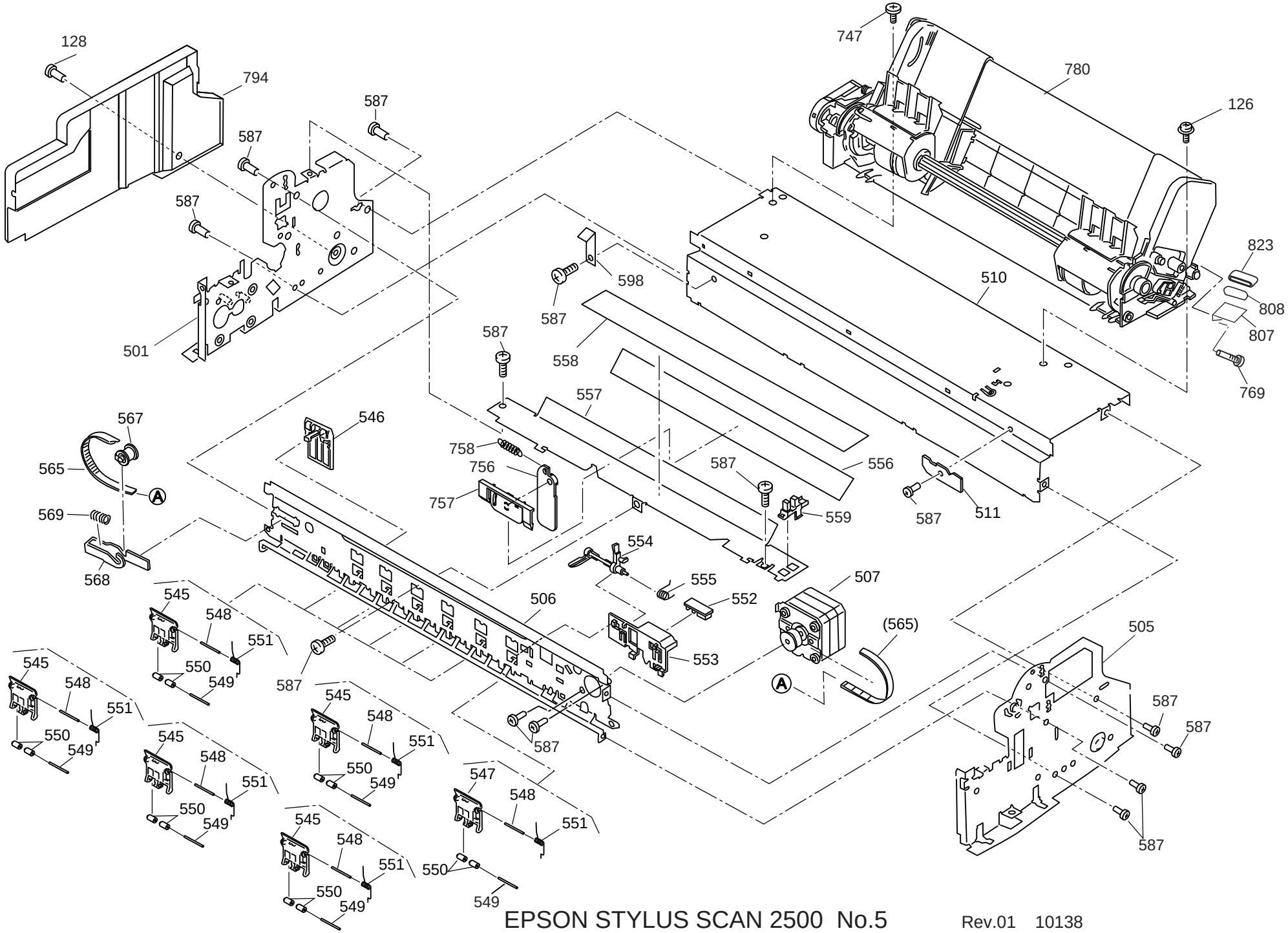

EPSON STYLUS SCAN 2500 No.5 Rev.01 10138

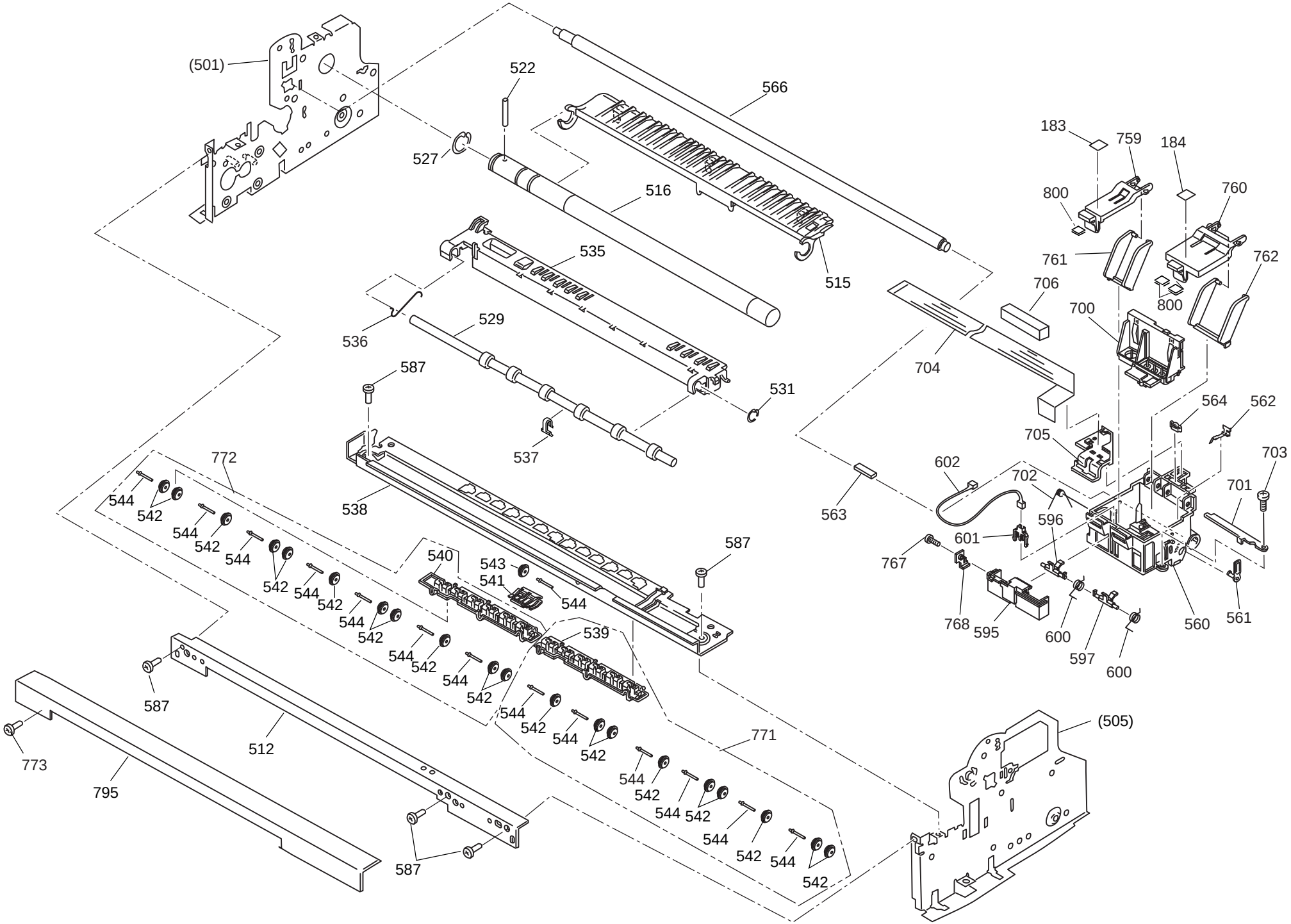

EPSON STYLUS SCAN 2500 No.6 Rev.01 10138

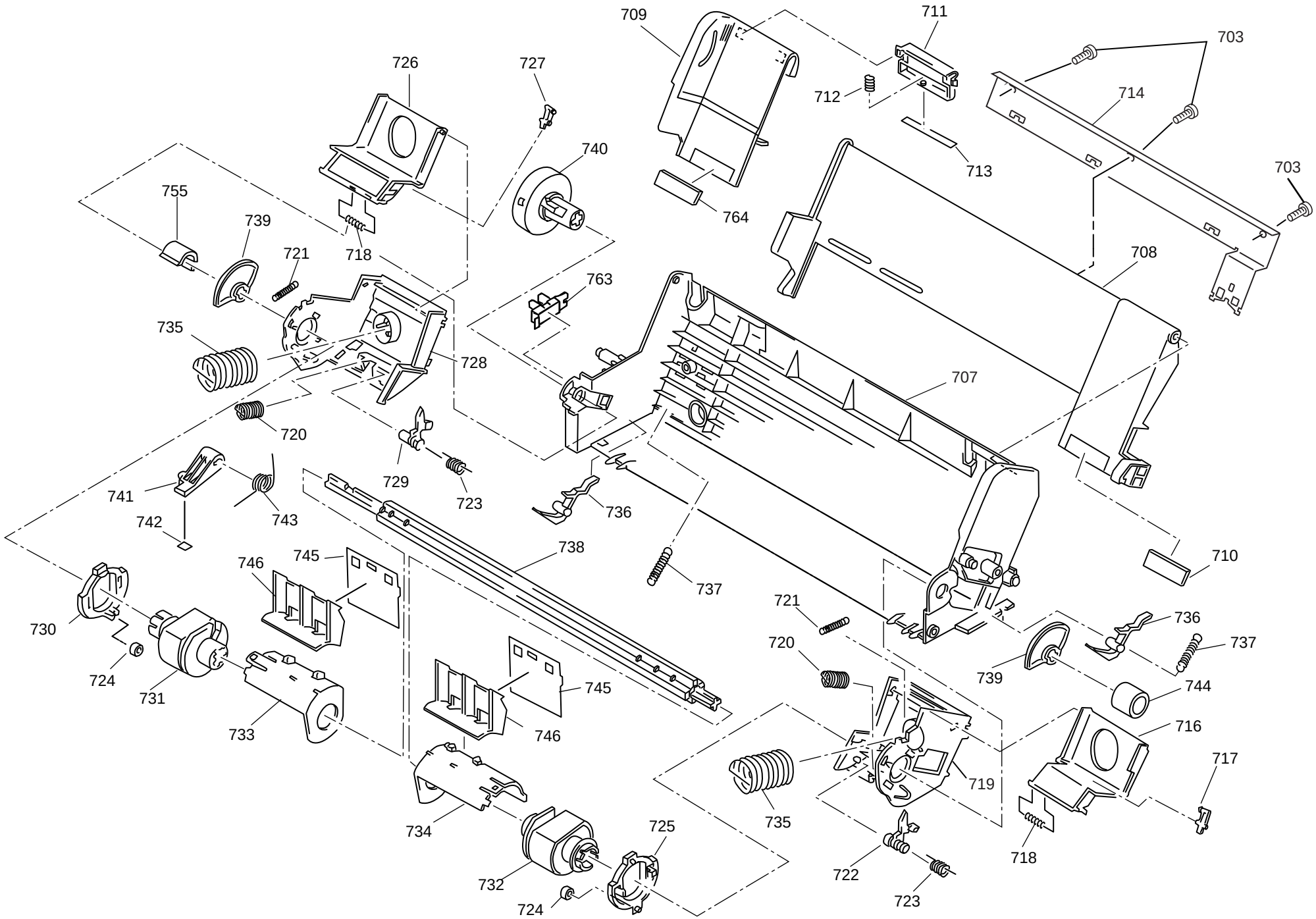

EPSON STYLUS SCAN 2500 No.7 Rev.01 10138

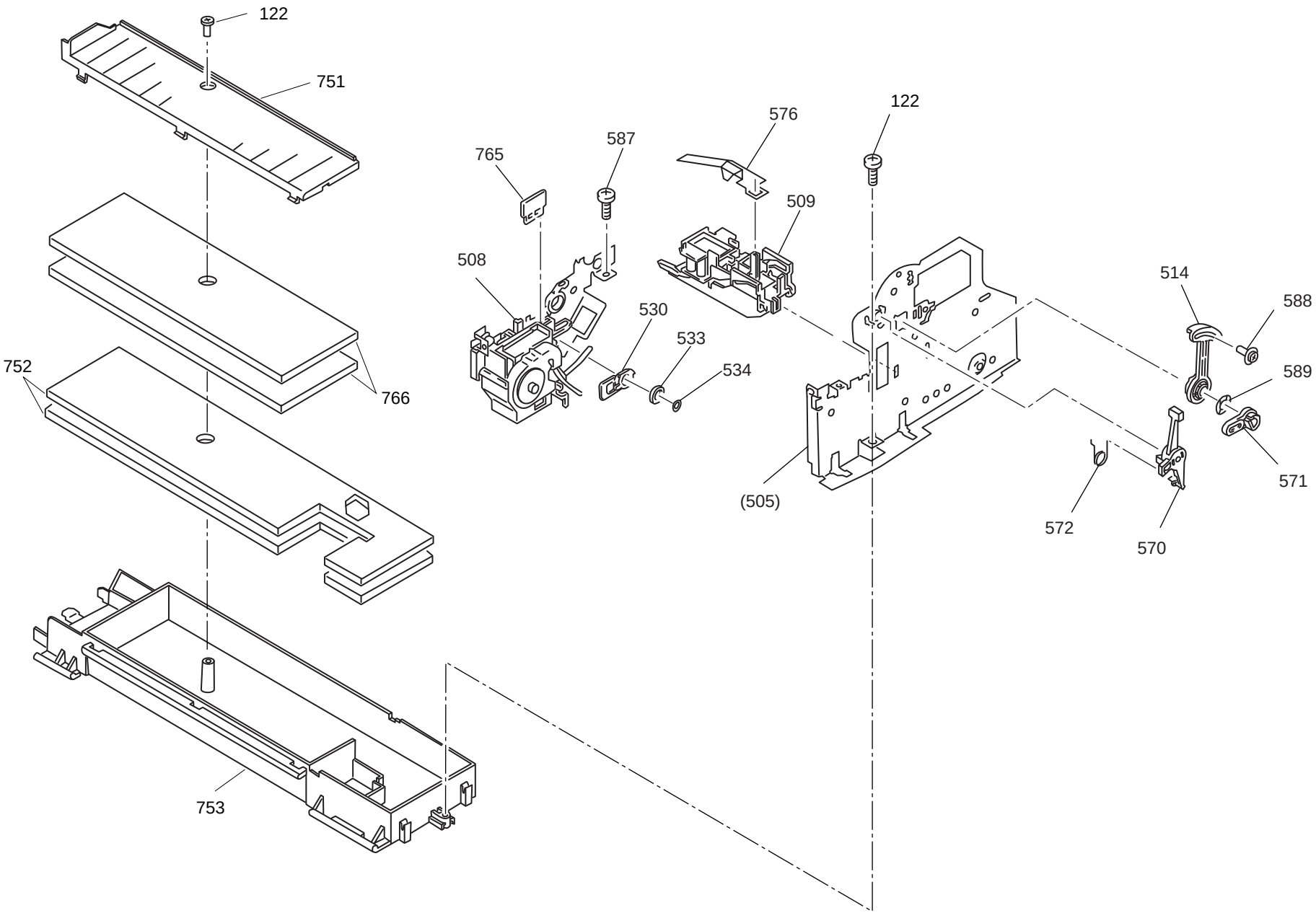

EPSON STYLUS SCAN 2500 No.8 Rev.01 10138

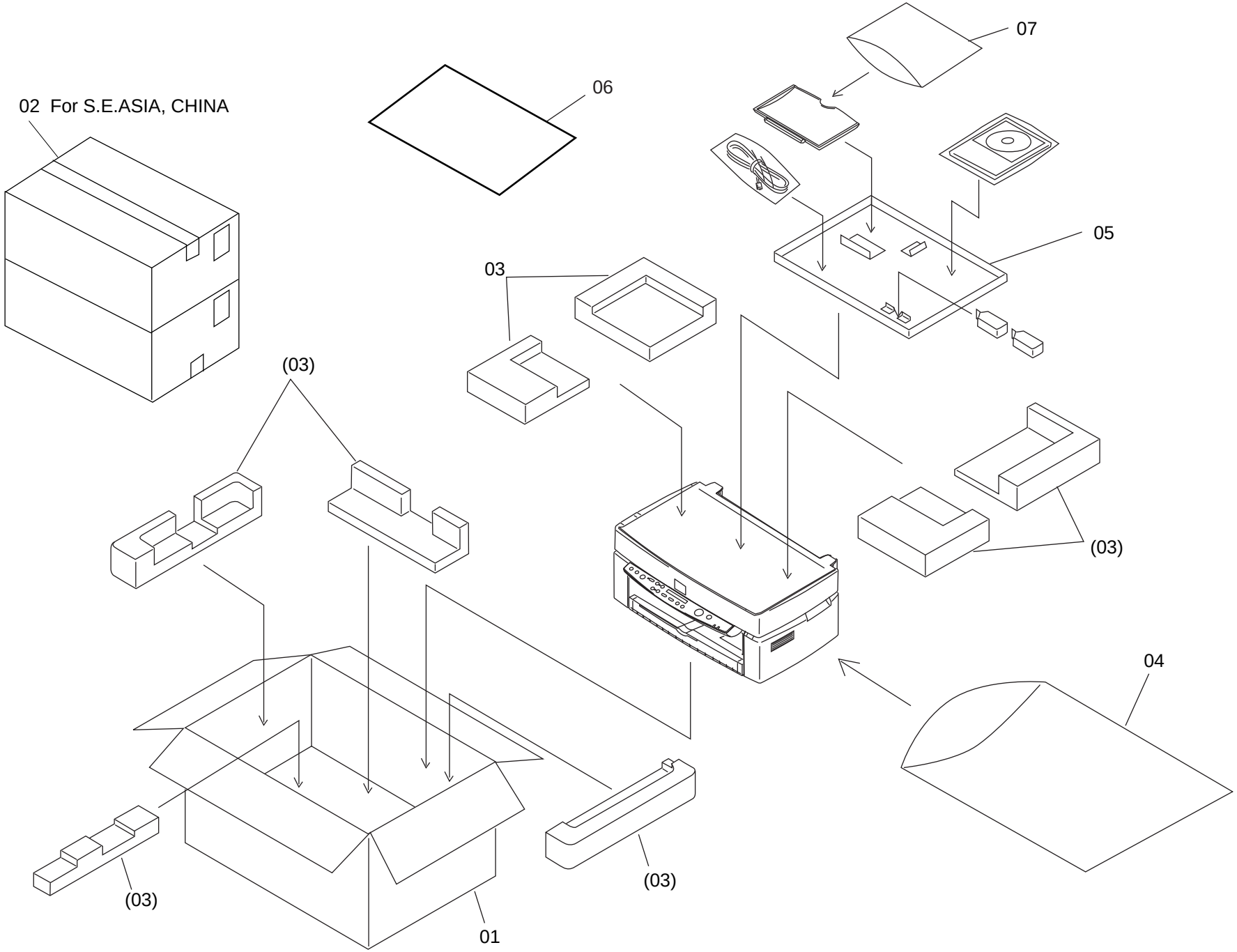

PACKING MATERIAL FOR EPSON STYLUS SCAN 2500 Rev.01 10138